KRALOY®

KWIKON® Shallow Slab Box

NEW PRODUCT SHOWCASE

Nonmetallic Shallow Slab Box

Ideal for parkade, apartment and office building construction

- Overall height of box allows for use in thinner concrete slabs
- Approved for support of light fixtures (up to 50 lbs.) or ceiling fans (up to 35 lbs.)
- Ready to use - no extra labor

Kraloy introduces the shallow slab box to its line of Kwikon® ENT Slab Boxes. With an overall box height of 2 ⅞", the SMBS/SMBS-H shallow slab box is designed to accommodate various construction applications including post-tensioning, where the resulting poured concrete slab is thinner than conventional slab construction. And to protect the threaded inserts and box interior from the possibility of concrete infiltration, a strong clear polyester film is applied to the box opening.

The SMBS/SMBS-H slab boxes are available with or without molded ENT hubs in seven different hub/knockout configurations to meet any project need. All Kwikon® ENT slab boxes are manufactured from durable, nonmetallic, nonconductive and non-corroding PVC, designed to withstand the construction trade's toughest environments.

Features:

- Overall height of 2 ⅞" compared to our regular slab box height of 3 ⅝"
- Equipped with threaded brass inserts (8/32 and 10/32) for light fixture and ceiling fan attachments
- Supplied as a fully assembled, one-piece, concrete-tight unit
- Slab box opening is sealed with a polyester film to prevent possible concrete infiltration

KRALOY®
The Fitting Choice

Toll Free: (800) 265-1815
Direct: (519) 681-2140
www.kraloyfittings.com

PIELNAIP031013
© 2004 Kraloy

New

Shallow Slab Box vs Standard Slab Box

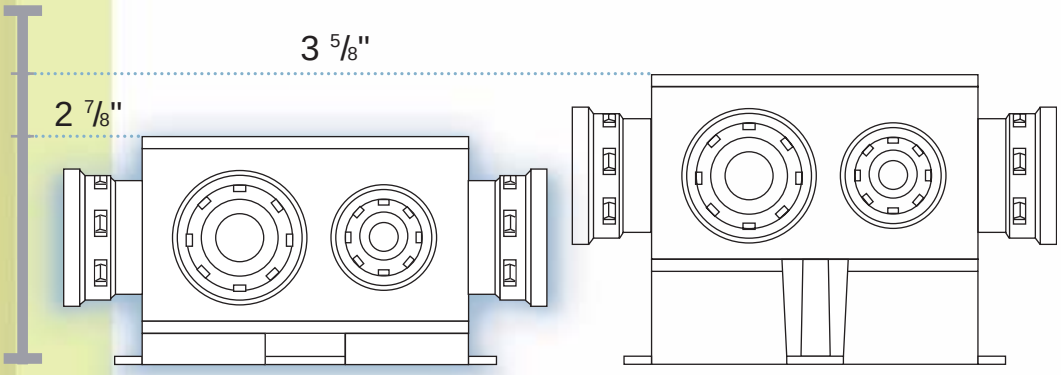

Shallow Slab Box

Standard Slab Box

Size (inches)	Part No.	Product Code	Volume (in^3)
8 x ½"	SMBS-H-10	089480	36 cu. in.
4 x ½" 4 x ¾"	SMBS-H-10/15	089481	
8 x ¾"	SMBS-H-15	089482	
4 x ½" 2 x ¾" 2 x 1"	SMBS-H-10/20	089483	
4 x ¾" 4 x 1"	SMBS-H-15/20	089484	
8 x ½"	SMBS-10	089490	
4 x ½" 2 x ¾" 2 x 1"	SMBS-10/20	089491	

KRALOY®
The Fitting Choice

Toll Free: (800) 265-1815

Direct: (519) 681-2140

www.kraloyfittings.com